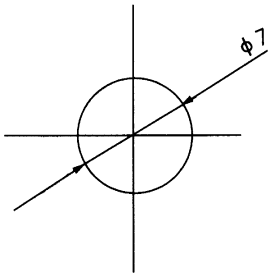
ϕ7

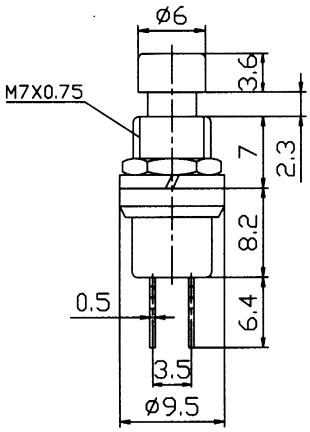
ϕ6
3.6
M7X0.75
7
2.3
8.2
0.5
6.4
3.5
ϕ9.5

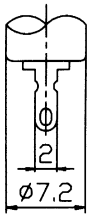
2
ϕ7.2