FOOT SWITCH

SLH-032-129

MODEL	SF12020-0202-20R-L-011

SPECIFICATIONS

Rating	AC125V 6A AC250V 3A DC30V 4A
Contact Resistance	50mΩ Max. Silver contacts
Insulation Resistance	DC500V-100 MΩMin.
Withstand Voltage	AC1000V-1 Minute
Operating Force	1.6±0.5Kgf
Life Cycles	10,000 Cycles
Sizes (m.m)	As Following Drawing

JUL 09 2004 收文日
93. 6. 29 發行

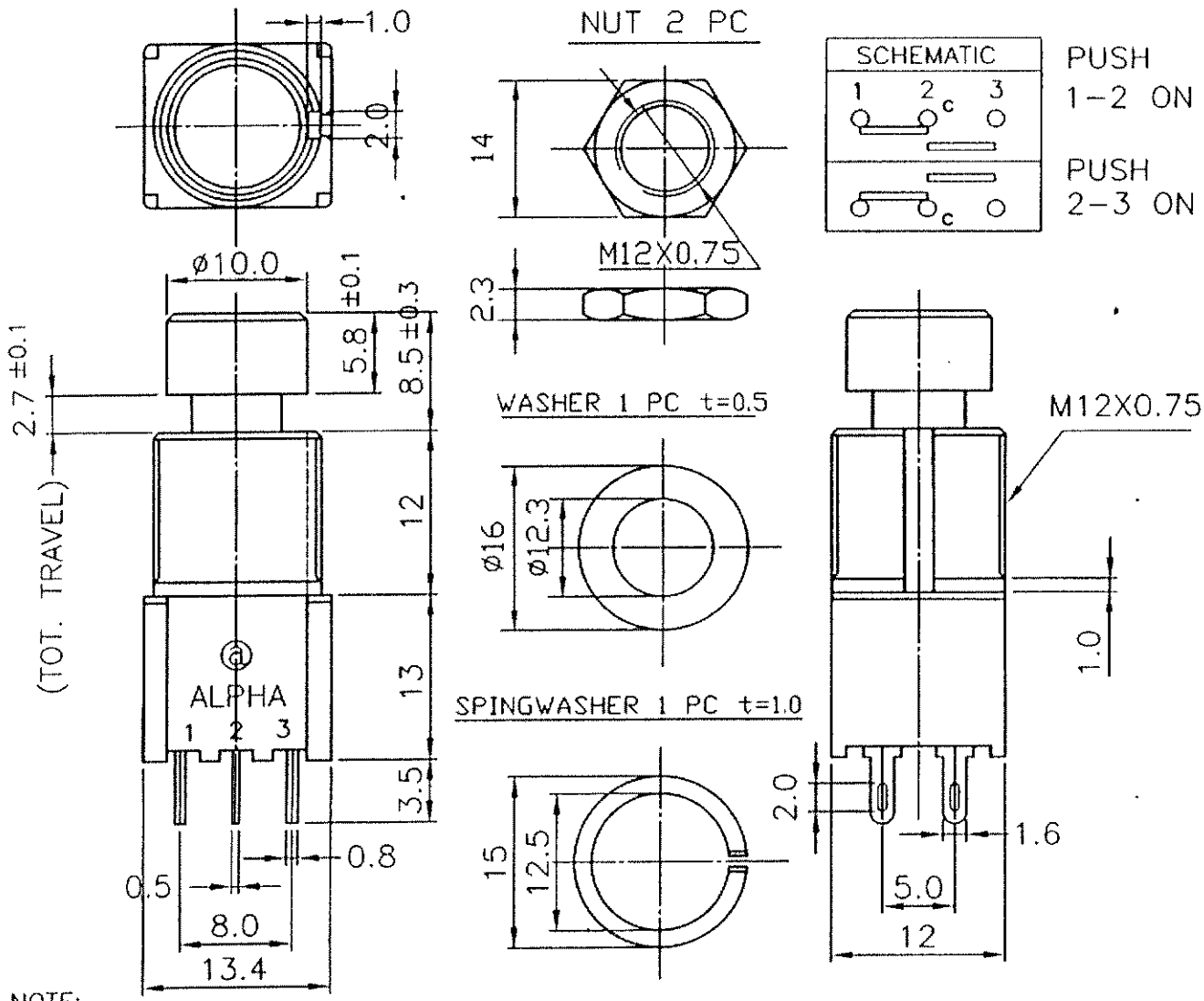

NOTE:

1. TOLERANCES UNLESS OTHERWISE SPECIFIED: ±0.3mm
2. FUNCTION: LATCHING

Date	2004.05.26	DWN		CHKD	93.5.26	APP'D	93.5.26

TAIWAN ALPHA ELECTRONIC CO., LTD.